Appliance Data Sheet

Product Type	Electric Oven
Product Code	**UBO732SS**
	**Product Description** 60cm Multifunction 73L True Fan Oven 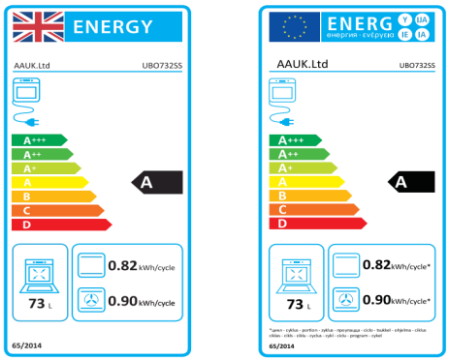

Features / Specification	
Barcode	8422248619264
Colour	Black Glass / Stainless Steel
Net Oven Cavity	73L
Cooking Type	True Fan
Control Type	Rotary Knobs
Timer	LED Touch Programmer
Display Colour	Red
Functions	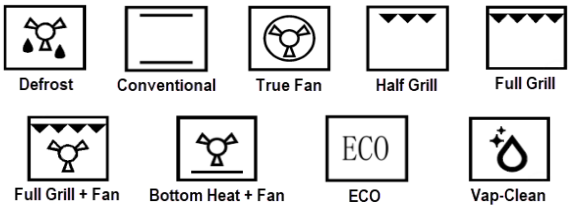
Oven Light	Yes
Self Cleaning	Vap-Clean (Basic Hydrolytic)
Oven Shelves	2
Oven Tray	1
Grill Trivet	1

Dimensions & Technical Information

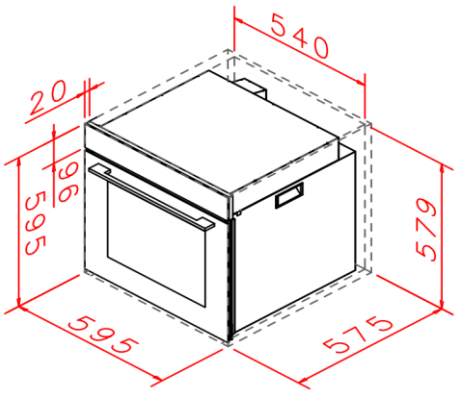

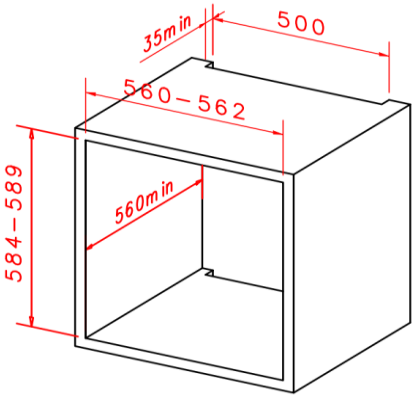

Product Dimensions (W x H x D)	595 x 595 x 575mm
Packed Dimensions (W x H x D)	625 x 665 x 655mm
Product Weight	35kg Packed / 32.5kg Unpacked
Power Supply	220-240V ~ 50/60Hz
Max Power	2800W
Cable / Plug	1.2m / UK
Supply Connection	13A